TBR Series - High Speed and Precision

TBR060 Series

TBR060 One Stage

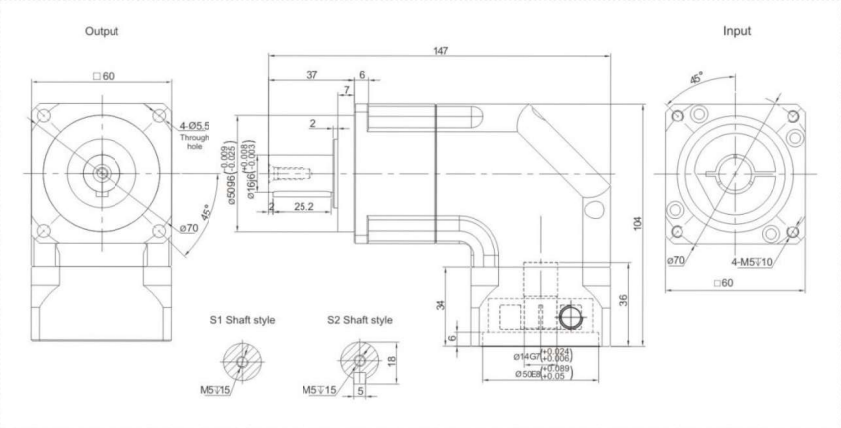

TBR060 Two Stage

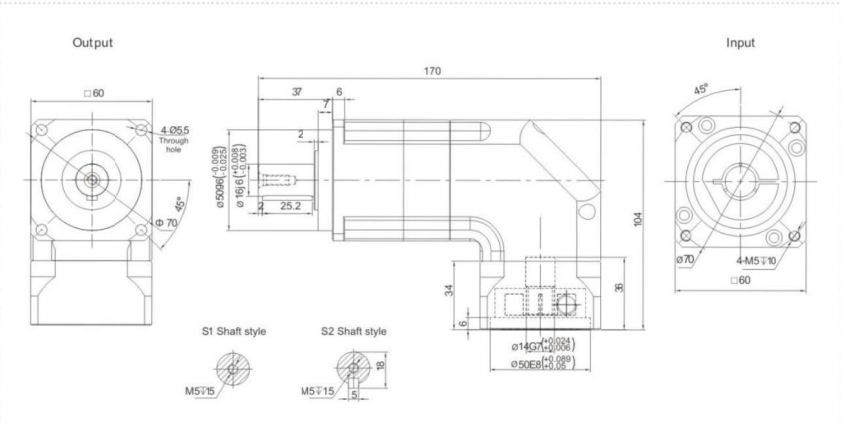

Performance Data

The TBR series reducer adopts a standardized flange interface. The installation is convenient and quick. Due to its integral structure design, this high-precision model can operate excellently in many demanding working application.

| TBR060 | | | One Stage | | |