Customer name：

Output

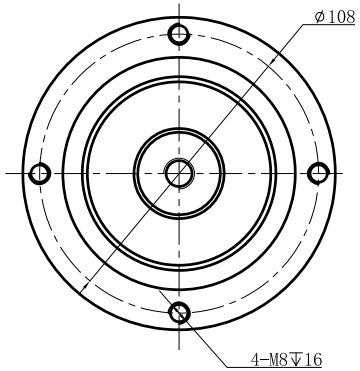

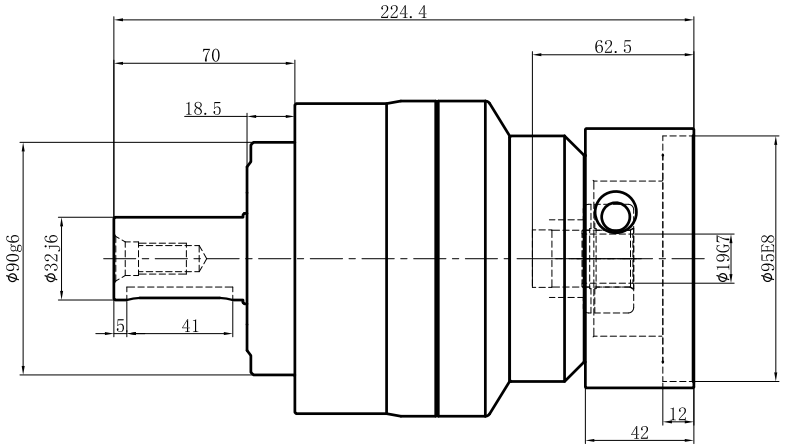

Input

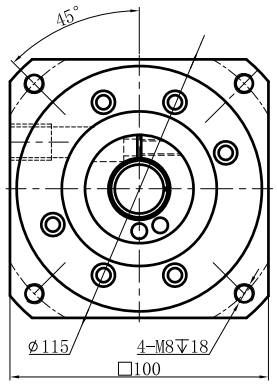

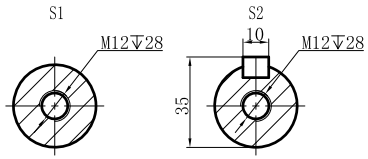

Transmission ratio	(A):1	Mass moments of inertia	(B)Kg.cm^2
Rated output torque	(C)Nm	Max.Output torque	(D)Nm
Rated input speed	3000rpm	Max input speed	6000rpm
Max.radial force	6100N	Max.axial force	3350N
Efficiency	≥ 94%	Operating temperature	-20°~+90°
Mounting position	Any	Lubrication method	Synthetic grease
Weight ±3%	9Kg	Service life	20000h
Standard backlash	≤ 7 arcmin	Protection class	IP65
Motor power		Noise level	63dB
Motor dimensions			

Ratio	A	B	C	D
	40	0.47	255	459
	35	0.47	300	540
	30	0.47	310	558
	25	0.47	320	576
	20	0.47	280	504
	15	0.47	200	360

Sign/Date

Ratio	A	B	C	D
	100	0.44	220	396
	80	0.44	255	459
	70	0.44	300	540
	60	0.44	310	558
	50	0.44	320	576

NOTE

Mark	No.	Sign	Date
	DRAW		
	CHEC		
	APPR		
	RULE		

Precision Planetary Reducer

TCE120

TCE120-L2

Shaft Type | Precision

GEARKO®

(Above specifications are for standard reducer and may be subject to change without notice.)