Customer Name:

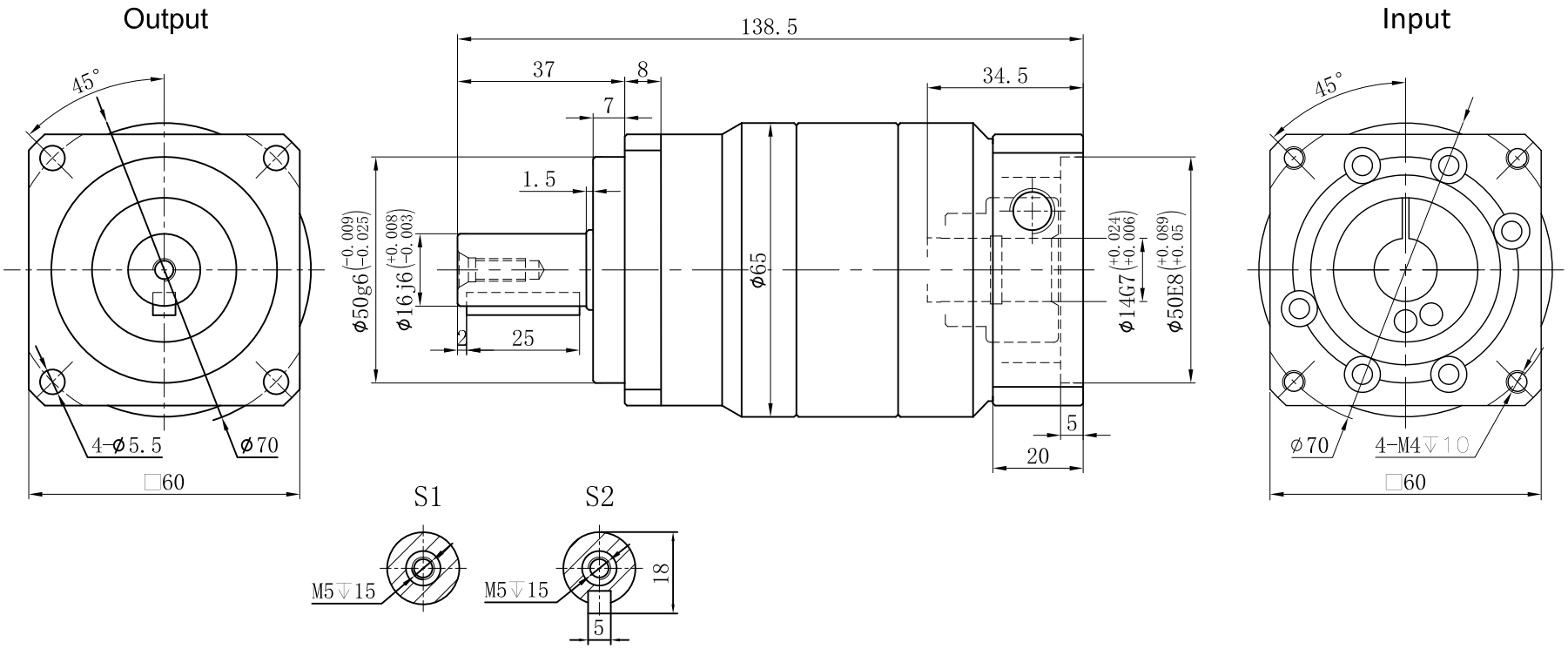

Transmission Ratio	(A):1	Mass Moments Of Inertia	(B)Kg.cm^2
Rated Output Torque	(C)Nm	Max Output Torque	(D)Nm
Rated Input Speed	3000rpm	Max Input Speed	5000rpm
Max Radial Force	1530N	Max Axial Force	765N
Efficiency	≥ 94%	Operating Temperature	-20°~+90°
Mounting Position	Any	Lubrication Method	Synthetic grease
Weight ±3%	1.7Kg	Service Life	20000h
Standard Backlash	≤ 7 arcmin	Protection Class	IP65
Motor Power	- - KW	Noise Level	58dB
Motor Dimensions			

Ratio	A	B	C	D
	15	0.13	40	72
	20	0.13	45	81
	25	0.13	55	99
	30	0.13	50	90
	35	0.13	45	81
	40	0.13	45	81

Sign/Date

Ratio	A	B	C	D
	50	0.13	55	99
	60	0.13	50	90
	70	0.13	45	81
	80	0.13	45	81
	100	0.13	35	63

Note

Mark	No.	Sign	Date
	DRAW		
	CHEC		
	APPR		
	RULE		

Precision Planetary Reducer

TCB060

TCB060-L2

Shaft Type	Precision

Above specifications are for standard reducer and may be subject to change without notice.