Customer Name:

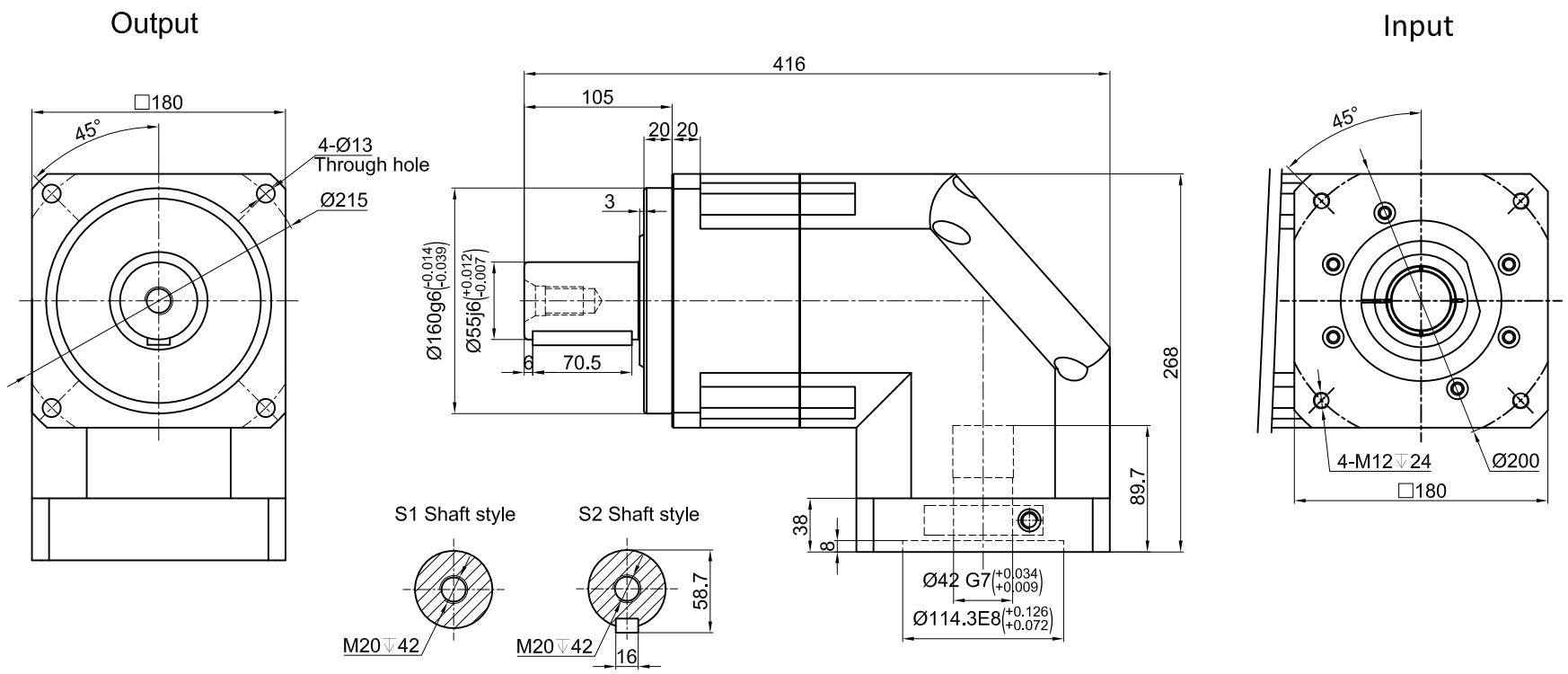

Transmission Ratio	(A):1	Mass Moments Of Inertia	(B)Kg.cm^2
Rated Output Torque	(C)Nm	Max Output Torque	(D)Nm
Rated Input Speed	3000rpm	Max Input Speed	6000rpm
Max Radial Force	14500N	Max Axial Force	7250N
Efficiency	≥ 95%	Operating Temperature	-20°~+90°
Mounting Position	Any	Lubrication Method	Synthetic grease
Weight ±3%	46.5Kg	Service Life	20000h
Standard Backlash	≤ 6 arcmin	Protection Class	IP65
Motor Power	- - KW	Noise Level	72dB
Motor Dimensions			

Ratio	A	B	C	D
	7	68.9	1100	1980
	6	68.9	1108	1994
	5	68.9	1200	2160
	4	68.9	1040	1872
	3	68.9	590	1062

Sign/Date

Ratio	A	B	C	D
	20	65.6	910	1638
	16	65.6	1000	1800
	14	65.6	1100	1980
	12	65.6	1108	1994
	10	65.6	910	1638
	8	68.9	1000	1800

Note

Mark	No.	Sign	Date
	DRAW		
	CHEC		
	APPR		
	RULE		

Precision Planetary Reducer

TBR180

TBR180-L1

Shaft Type	Precision

Above specifications are for standard reducer and may be subject to change without notice.