Customer Name:

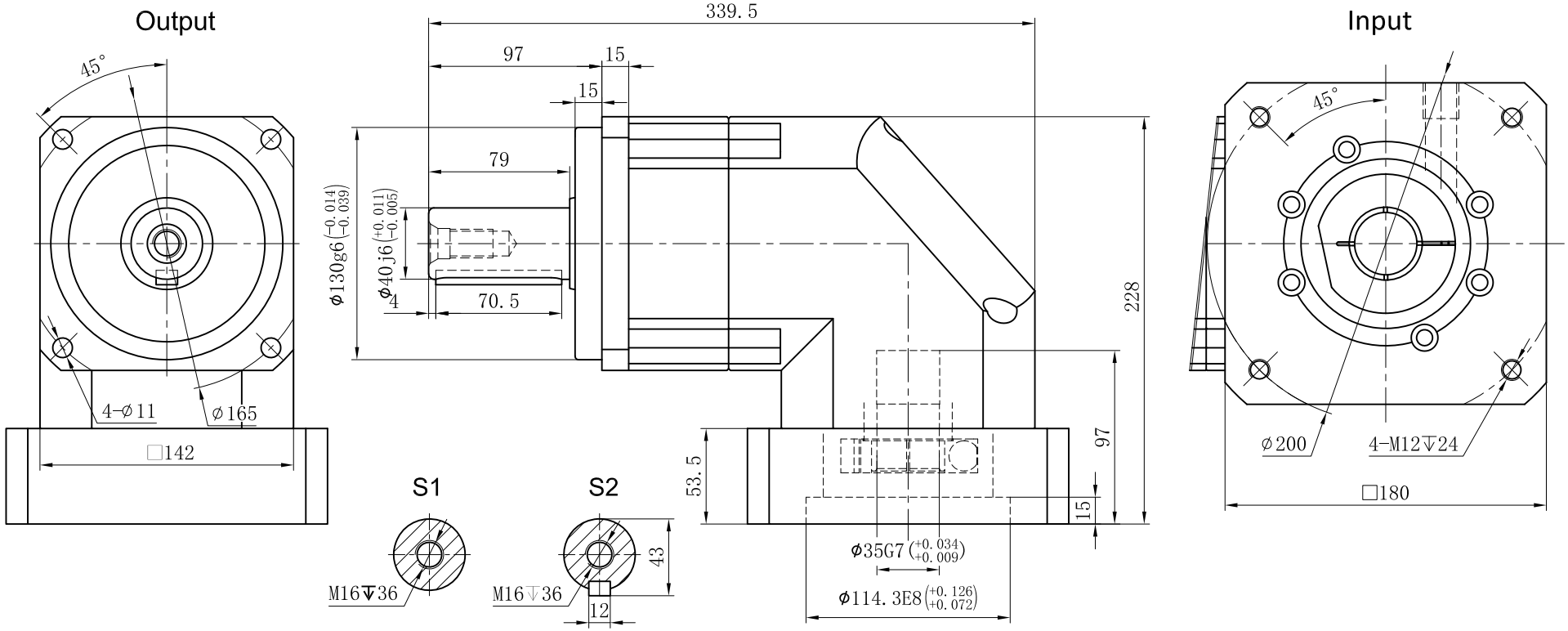

Transmission Ratio	(A):1	Mass Moments Of Inertia	(B)Kg.cm^2
Rated Output Torque	(C)Nm	Max Output Torque	(D)Nm
Rated Input Speed	3000rpm	Max Input Speed	6000rpm
Max Radial Force	9400N	Max Axial Force	4700N
Efficiency	≥ 95%	Operating Temperature	-20°~+90°
Mounting Position	Any	Lubrication Method	Synthetic grease
Weight ±3%	25.2Kg	Service Life	20000h
Standard Backlash	≤ 6 arcmin	Protection Class	IP65
Motor Power	- - KW	Noise Level	70dB
Motor Dimensions			

	3	23.4	340	612	Sign/Date		10	23.4	460	828
	4	23.4	540	972			12	21.8	600	1080
	5	23.4	650	1170			14	21.8	555	999
	6	23.4	600	1080			16	21.8	500	900
	7	23.4	555	999			20	21.8	450	810
	8	23.4	500	900						
Ratio	A	B	C	D		Ratio	A	B	C	D

Note

Mark	No.	Sign	Date
	DRAW		
	CHEC		
	APPR		
	RULE		

Precision Planetary Reducer

TBR142

TBR142-L1

Shaft Type	Precision

Above specifications are for standard reducer and may be subject to change without notice.