Customer name：

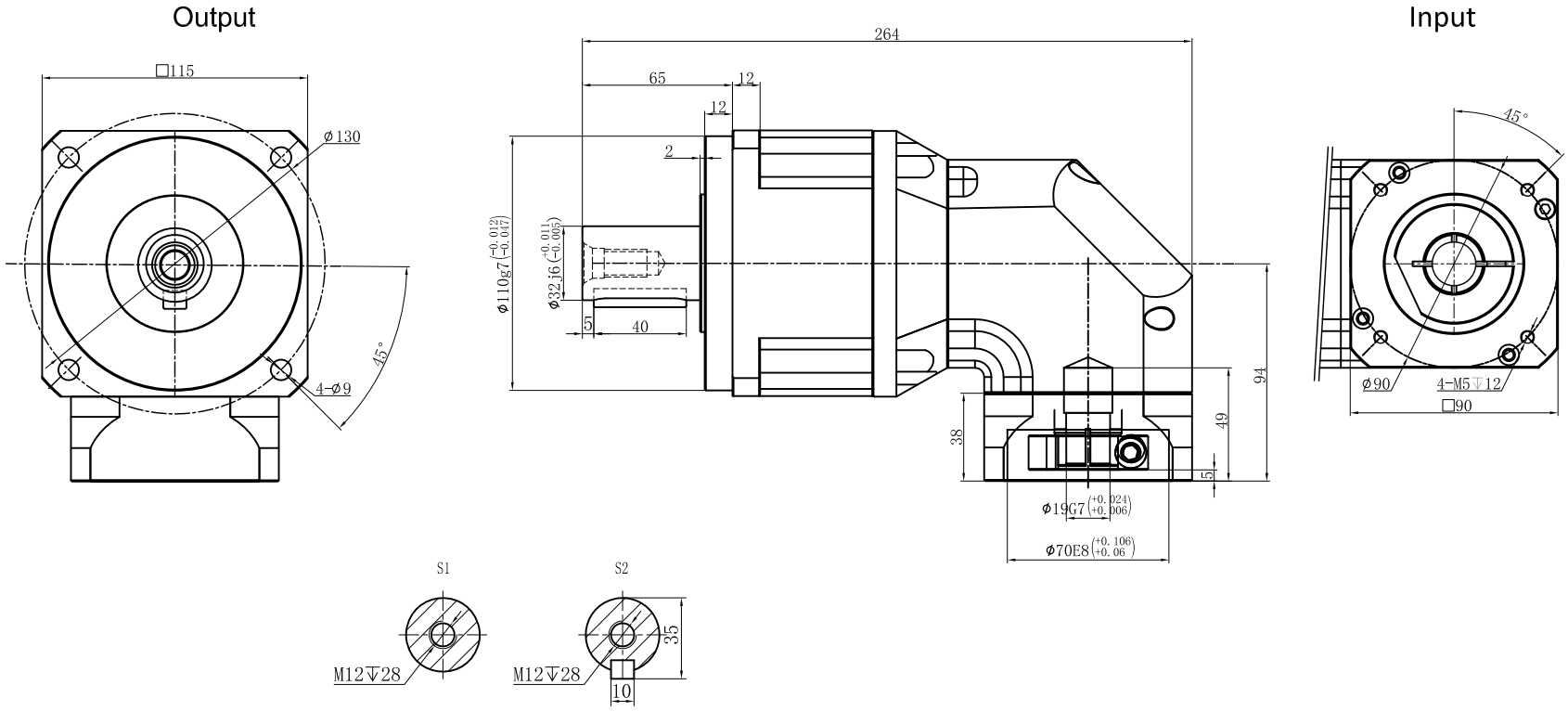

Transmission ratio	(A):1	Mass moments of inertia	(B)Kg.cm 2
Rated output torque	(C)Nm	Max.Output torque	(D)Nm
Rated input speed	4000rpm	Max input speed	8000rpm
Max.radial force	6700N	Max.axial force	3350N
Efficiency	≥ 92%	Operating temperature	-20°~+90°
Mounting position	Any	Lubrication method	Synthetic grease
Weight ±3%	12.5Kg	Service life	20000h
Standard backlash	≤ 9 arcmin	Protection class	IP65
Motor power		Noise level	68dB
Motor dimensions			

	70	2.25	300	540	Sign/Date		200	1.87	235	423
	60	2.25	310	558			180	1.87	230	414
	50	2.25	330	594			160	1.87	260	468
	40	2.25	260	468			140	1.87	300	540
	35	2.25	300	540			120	1.87	310	558
	30	2.25	310	558			100	2.25	235	423
	25	2.25	330	594			80	2.25	260	468
Ratio	A	B	C	D		Ratio	A	B	C	D

NOTE

Mark	No.	Sign	Date
	DRAW		
	CHEC		
	APPR		
	RULE		

Precision Planetary Reducer

TBR115

TBR115-L2

Shaft Type	Precision