Customer name：

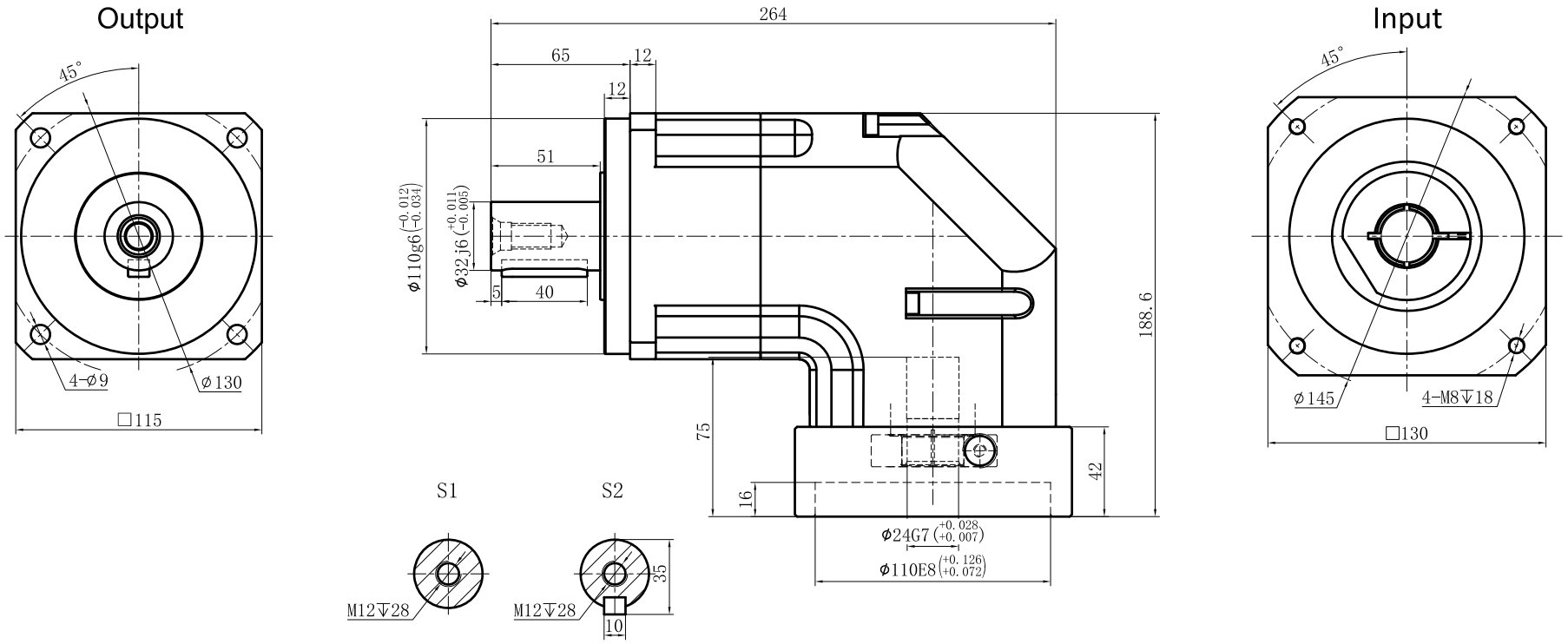

Transmission ratio	(A):1	Mass moments of inertia	(B)Kg.cm²
Rated output torque	(C)Nm	Max.Output torque	(D)Nm
Rated input speed	4000rpm	Max input speed	8000rpm
Max.radial force	6700N	Max.axial force	3350N
Efficiency	≥ 95%	Operating temperature	-20°~+90°
Mounting position	Any	Lubrication method	Synthetic grease
Weight ±3%	13Kg	Service life	20000h
Standard backlash	≤ 6 arcmin	Protection class	IP65
Motor power		Noise level	68dB
Motor dimensions			

Ratio	A	B	C	D
	8	6.84	260	468
	7	6.84	300	540
	6	6.84	310	558
	5	6.84	330	594
	4	6.84	260	468
	3	6.84	200	360

Sign/Date

Ratio	A	B	C	D
	20	6.25	235	423
	16	6.25	260	468
	14	6.25	300	540
	12	6.25	310	558
	10	6.25	235	423

NOTE

Mark	No.	Sign	Date
	DRAW		
	CHEC		
	APPR		
	RULE		

Precision Planetary Reducer

TBR115

TBR115-L1

Shaft Type	Precision

GEARKO®

Above specifications are for standard reducer and may be subject to change without notice.