Customer name:

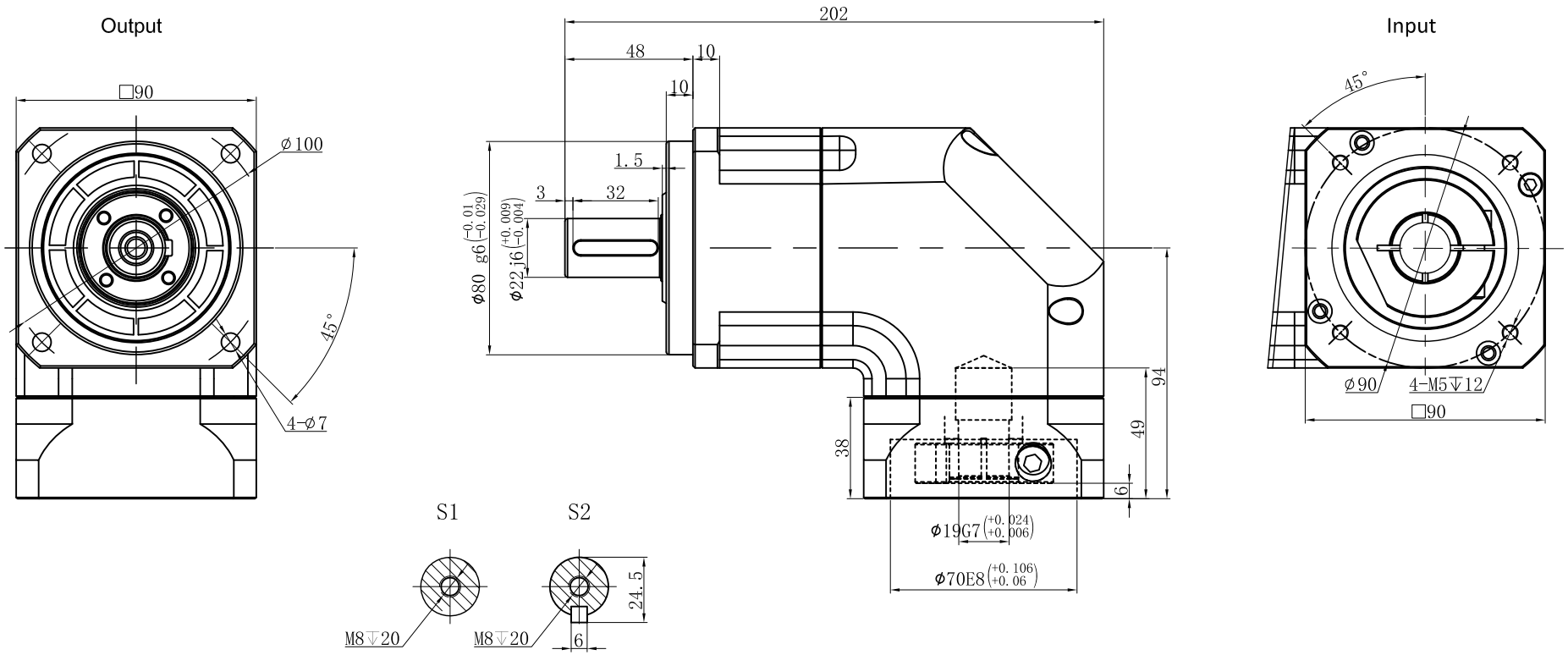

Transmission ratio	(A):1	Mass moments of inertia	(B)Kg.cm^2
Rated output torque	(C)Nm	Max.output torque	(D)Nm
Rated input speed	4000rpm	Max input speed	8000rpm
Max.radial force	3250N	Max.axial force	1625N
Efficiency	≥ 95%	Operating temperature	-20°~+90°
Mounting position	Any	Lubrication method	Synthetic grease
Weight ±3%	6Kg	Service life	20000h
Standard backlash	≤ 6 arcmin	Protection class	IP65
Motor power		Noise level	65dB
Motor dimensions			

Ratio	A	B	C	D
	10	2.25	102	183
	7	2.25	140	252
	5	2.25	150	270
	4	2.25	120	252

Sign/Date

Ratio	A	B	C	D
	20	1.87	102	183
	14	1.87	140	252
	8	2.25	123	221
	6	2.25	148	266
	3	2.25	100	180

Note

Mark	No.	Sign	Date
	DRAW		
	CHEC		
	APPR		
	RULE		

Precision planetary reducer

TBR090

TBR090-L1

Shaft Type | Precision

GEARKO®

Above specifications are for standard reducer and may be subject to change without notice.