Customer Name:

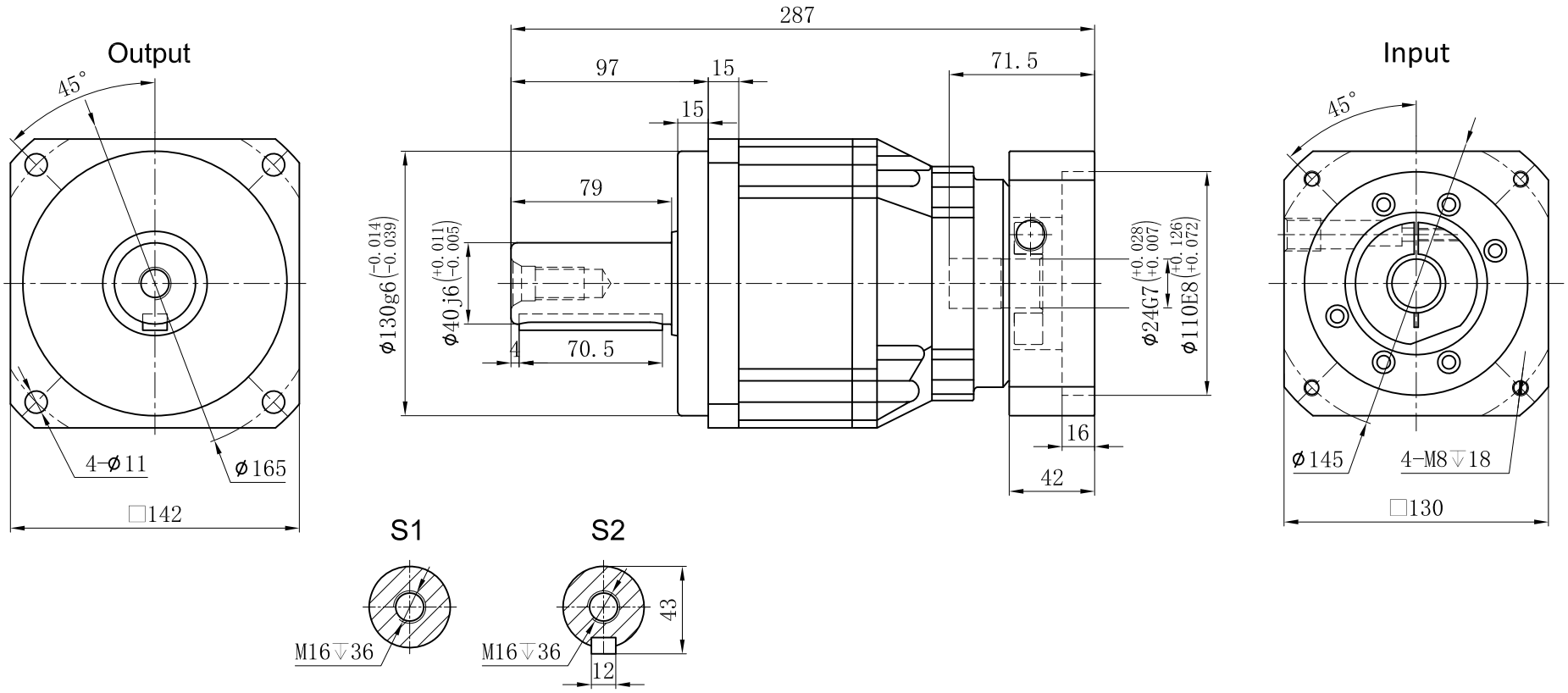

Transmission Ratio	(A):1	Mass Moments Of Inertia	(B)Kg.cm^2
Rated Output Torque	(C)Nm	Max Output Torque	(D)Nm
Rated Input Speed	3000rpm	Max Input Speed	6000rpm
Max Radial Force	9400N	Max Axial Force	4700N
Efficiency	≥ 94%	Operating Temperature	-20°~+90°
Mounting Position	Any	Lubrication Method	Synthetic grease
Weight ±3%	16.4Kg	Service Life	20000h
Standard Backlash	≤ 7 arcmin	Protection Class	IP65
Motor Power	- - KW	Noise Level	65dB
Motor Dimensions			

Ratio	A	B	C	D
	15	2.71	340	612
	20	2.71	545	981
	25	2.71	650	1170
	30	2.71	600	1080
	35	2.71	555	999
	40	2.71	500	900

Sign/Date

Ratio	A	B	C	D
	50	2.57	650	1170
	60	2.57	600	1080
	70	2.57	555	999
	80	2.57	500	900
	100	2.57	460	828

Note

Mark	No.	Sign	Date
	DRAW		
	CHEC		
	APPR		
	RULE		

Precision Planetary Reducer

TB142

TB142-L2

Shaft Type	Precision

Above specifications are for standard reducer and may be subject to change without notice.