Customer Name:

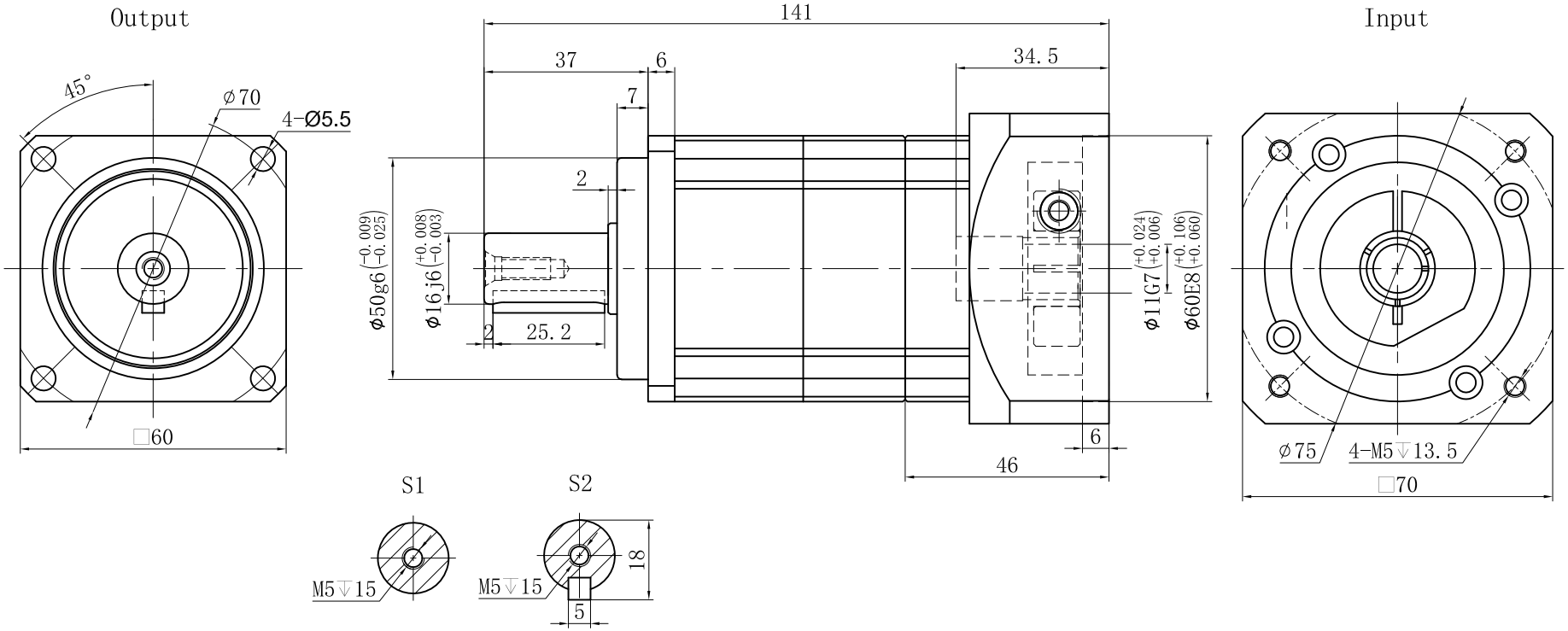

Transmission Ratio	(A):1	Mass Moments Of Inertia	(B)Kg.cm^2
Rated Output Torque	(C)Nm	Max Output Torque	(D)Nm
Rated Input Speed	5000rpm	Max Input Speed	10000rpm
Max Radial Force	1530N	Max Axial Force	765N
Efficiency	≥ 94%	Operating Temperature	-20°~+90°
Mounting Position	Any	Lubrication Method	Synthetic grease
Weight ±3%	1.9Kg	Service Life	20000h
Standard Backlash	≤ 7 arcmin	Protection Class	IP65
Motor Power	- - KW	Noise Level	60dB
Motor Dimensions			

					Sign/Date					
	40	0.13	45	81						
	35	0.13	50	90			100	0.13	42	75.6
	30	0.13	58	104.4			80	0.13	45	81
	25	0.13	58	104.4			70	0.13	50	90
	20	0.13	50	90			60	0.13	55	99
	15	0.13	52	93.6			50	0.13	58	104.4
Ratio	A	B	C	D		Ratio	A	B	C	D

Note

Mark	No.	Sign	Date
	DRAW		
	CHEC		
	APPR		
	RULE		

Precision Planetary Reducer

TB060

TB060-L2

Shaft Type | Precision

Above specifications are for standard reducer and may be subject to change without notice.